28V Tolerant DPDT USB Analog Switch Chip CH9442

Datasheet

Version: V1.0

https://wch-ic.com

1. Overview

CH9442 is a USB2.0 high-speed differential signal DPDT 2-to-1 analog switch chip with high bandwidth, low on-resistance, and supports a rated 3.3V or 5V power supply voltage. It is used to connect 2 low-voltage high-speed differential signals to external ports after 2:1 MUX.

CH9442 supports 28V DC tolerant voltage for external XA/XB pin. In PD high-voltage USB application, XA/XB is connected to D+ and D- signals of external USB port, and the built-in overvoltage protection of CH9442 can cope with accidents when Type-C connector supplies 20V or 28V high voltage.

2. Features

- Differential bidirectional alternative analog switch DPDT.
- Low on-resistance, Ron is about 5Ω.
- Low capacitance, typical value is about 4pF.
- High bandwidth, about 1.4GHz, supporting high-speed USB signals.
- High tolerant voltage, 28V DC tolerant voltage for external pin XA/XB, built-in overvoltage protection.
- The control signal is independent of the power supply voltage, and supports 5V, 3.3V, 2.5V and 1.8V control signals without level conversion.
- Wide power supply voltage range, rated 3.3V or 5V power supply voltage, supporting the voltage range of 2.5V~5.5V.
- Enable pin is provided, so the power consumption is low after shutdown.
- The ESD performance of external pin XA/XB is up to 5KV HBM, which supports Class 3A.
- Provide QFN10_1.4x1.8, QFN10_1.5x2 and other small package forms, which are RoHS-compatible.

3. Pinouts

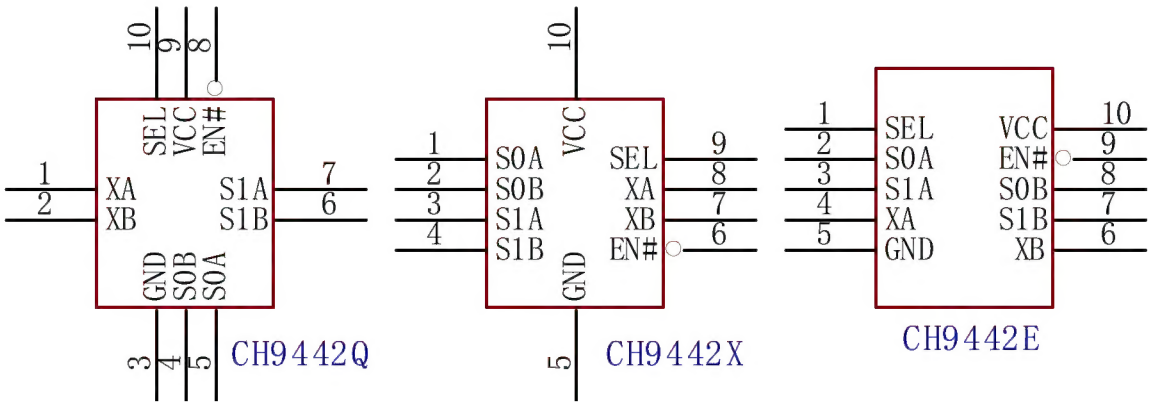

Package Form	Body Size	Pin Pitch		Package description	Order Model
QFN10_14x18	1.4*1.8mm	0.4mm	15.7mil	Quad Flat No-Lead Package	CH9442Q
QFN10_15x2	1.5*2mm	0.5mm	19.7mil	Quad Flat No-Lead Package	CH9442X
MSOP10	3*3mm	0.5mm	19.7mil	Miniature Small Outline Package	CH9442E

Note:

The package is small in size, and only the code name is printed on the front, but not all models.

CH9442Q is compatible with CH442Q pin, and CH9442E is compatible with CH442E and CH440E pin.

4. Pin Definitions

9442Q	9442X	9442E	Pin name	Type	Pin description
9	10	10	VCC	Power	Positive power supply
3	5	5	GND	Power	Common ground, control signal reference ground
8	6	9	EN#	Input	Enable input, active at low level, turned off and powered down at high level.
10	9	1	SEL	Input	Analog switch selection input: High level selection 1#ternimal (S1x); Low level selection 0#ternimal (S0x).
1/2	8/7	4/6	XA/XB	Analog signals	Common terminal and external terminal of 2-to-1analog switch.
5/4	1/2	2/8	S0A/S0B	Analog signals	The internal 0# port of 2-to-1 analog switch is selected by inputting a low level on the SEL pin
7/6	3/4	3/7	S1A/S1B	Analog signals	The internal 1# port of the 2-to-1 analog switch is selected by inputting a high level on the SEL pin

5. Function Description

CH9442 is a DPDT analog switch chip supporting high-speed differential signals, which includes 2 single-pole, double-throw or two-way switches.

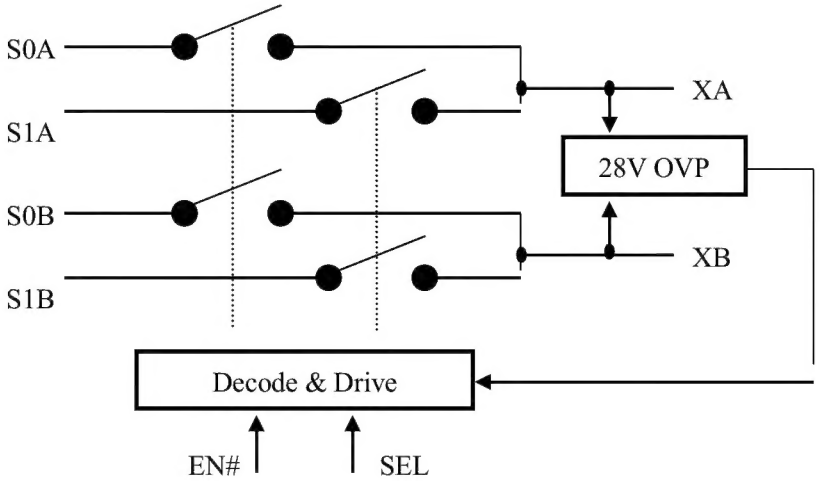

CH9442 is enabled or turned off by EN# pin control, and is switched by SEL pin selection. The following table is its control table.

OVP	EN#	IN	XA	XB	Description
Normal	0	0	Connect S0A	Connect S0B	Select 0# port
Normal	0	1	Connect S1A	Connect S1B	Select 1# port
X	1	X	Disconnect all	Disconnect all	Turn off and power down.
Over-voltage	0	X	Disconnect all	Disconnect all	Temporary protection

There are weak pull-down currents inside the EN# and SEL pins, respectively, which are used to connect the 0# port by default when there is no control signal.

The XA/XB pin of CH9442 supports 28V DC tolerant voltage, and the trigger voltage of overvoltage protection is V_{OVP}, as shown in the diagram below.

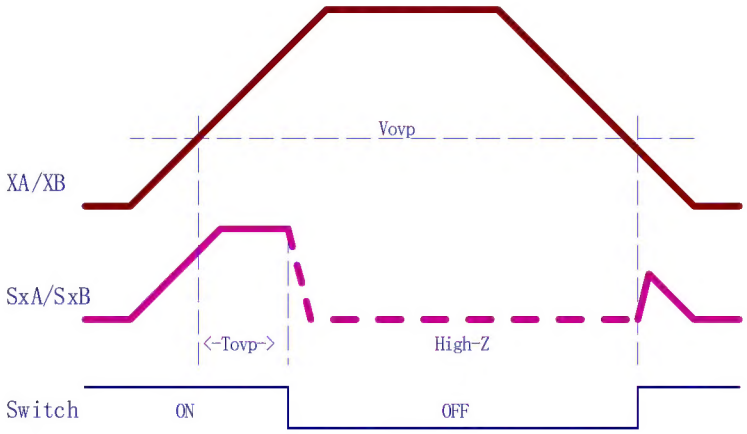

6. Parameters

6.1 Absolute Maximum Value (Critical or exceeding the absolute maximum value will probably cause the chip to work improperly or even be damaged)

Name	Parameter Description	Min.	Max.	Unit
T_A	Ambient temperature during operation	-40	85	℃
T_S	Ambient temperature during storage	-55	150	℃
V_{CC}	Power supply voltage (relative to GND)	-0.5	7.0	V
V_X	Voltage on external pin XA/XB (relative to GND)	-0.5	30	V
V_S	Voltage on internal pin S0x/S1x (relative to GND)	-0.5	7.0	V
V_{CI}	Voltage on control pin EN/SEL (relative to GND)	-0.5	7.0	V
I_{SW}	Continuous current of analog switch	-30	30	mA
I_{GND}	Continuous current through VCC/GND pin	-100	100	mA
V_{ESDX}	ESD tolerant voltage of HBM on USB signal pin	5		KV
V_{ESDI}	ESD tolerant voltage of HBM on other pins	3		KV

6.2 Electrical Parameters (Test conditions: TA=25℃, VCC=3.3V, analog signal is a high-speed USB signal)

Name	Parameter Description	Min.	Typ.	Max.	Unit	Name
V_{CC}	VCC power voltage		2.5	3.3	5.5	V
I_{CCEN}	Working state power supply current	EN#=GND, SEL=GND/VCC		26	60	uA
I_{CCOVP}	Temporary protection power supply current	EN#=GND, overvoltage protection		24	60	uA
I_{CCPD}	Lower power supply current	EN#=VCC, SEL=GND/VCC		0.02	3	uA
V_{IL}	Control pin EN#/SEL low level input voltage	VCC=3.3V	0		0.8	V
		VCC=5V	0		0.9	V
V_{IH}	Control pin EN#/SEL high level input voltage	VCC=3.3V	1.7		5	V
		VCC=5V	2.3		5	V
I_{PD}	Weak pull-down current of control pin EN#/SEL			0.3	1	uA
I_{LEAK}	Input leakage current of control pin EN#/SEL			0.3	3	uA
V_{OVP}	XA/XB pin Voltage of triggering overvoltage protection (with hysteresis)		4.6	4.8	5.1	V
I_{OFF}	Switch leakage current in off state	0 <= XA/XB <= 3.3V	-1	0	1	uA
		3.3 < XA/XB < 28V	-1	4	20	uA
V_{SWUSB}	Recommended analog signal voltage range (High-speed USB)		0		0.5	V
V_{SWX}	The voltage range of the analog signal allowed to pass		-0.2		3.6	V
R_{ONU}	Switch on-resistance	Analog signal voltage =0V~0.5V		5	8	Ω
ΔR_{ONU}	Switch on-resistance matching			0.1	0.5	Ω

R_{FONU}	Switch on-resistance flatness			0.2	0.5	Ω

6.3 Timing Parameters (Test conditions: TA = 25°C, VCC = 3.3V, analog signal is a high-speed USB signal)

Name	Parameter Description	Min.		Typ.	Max.	Unit	Name
C_{IN}	Control pin EN#/SEL capacitance		F=1MHz		2		pF
C_{OFF}	Analog signal pin capacitance when the switch is closed		F=1MHz		2		pF
C_{ON}	Analog signal pin capacitance when switch is on		F=1MHz		4		pF
T_{SW}	Analog switch switching delay	R_L=50Ω, C_L=5pF			0.4	1	uS
T_{ON}	Analog switch turn-on delay	R_L=50Ω, C_L=5pF			20	100	uS
T_{OFF}	Analog switch turn-off delay	R_L=50Ω, C_L=5pF			0.03	0.1	uS
T_{OVP}	OVP protection response delay	V_X=20V, t_{RISE}=100nS		0.2	0.5	1	uS
BW	CH9442Q/X analog switch -3dB bandwidth		R_L=50Ω		1.4		GHz
	CH9442E analog switch -3dB bandwidth		R_L=50Ω		1.2		GHz
DILS	CH9442Q/X differential insertion loss		F=240MHz		-0.7		dB
DOIS	CH9442Q/X differential off isolation		F=240MHz		-40		dB
DRLS	CH9442Q/X differential return loss		F=240MHz		-15		dB
NECS	CH9442Q/X differential near-end crosstalk		F=240MHz		-40		dB

7. Applications

7.1 Type-C USB Signal Switch

CH9442 supports high-speed signal MUX 2:1 switching, which is suitable for High-Speed USB 2.0. In PDUSB application, XA and XB are connected to USB differential signals of external ports, and U4 can be a high-voltage fast charging protocol chip; S0A and S0B are connected to the internal USB differential signal, which is the default connection when U2 does not output the control signal; S1A and S1B are connected with another pair of internal USB differential signals; Where a corresponds to D+ (or a corresponds to D-) and b corresponds to D- (or b corresponds to D+).

Type-C supports USBPD high-power power transmission, and VBUS is sometimes as high as 20V or 28V during high-voltage power supply or charging. USB plugging and unplugging or other accidental circumstances may cause D+ or D- signals to accidentally touch high voltage. The XA and XB pins of CH9442 support 28V tolerant voltage, and the built-in overvoltage protection will quickly close the analog switch to protect U2 and U3 chips connected to S0x/S1x.

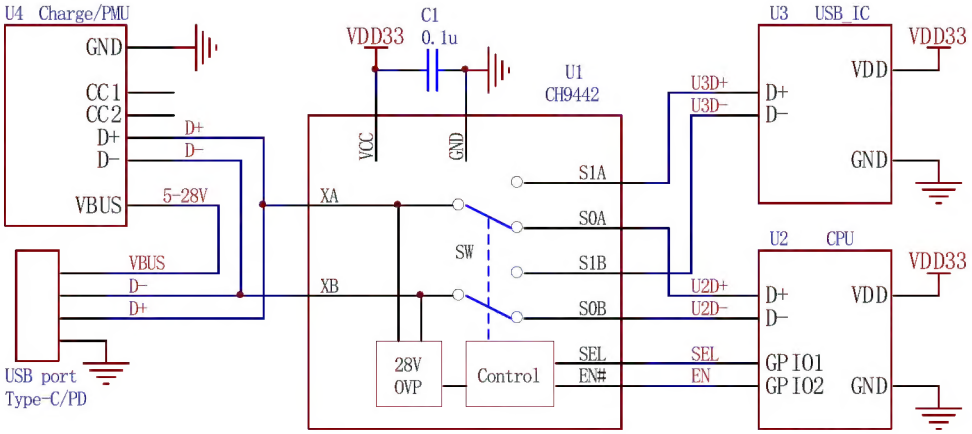

8. Package Information

Note: All dimensions are in millimeters.

The pin center spacing values are nominal, without error. And the error of dimensions other than the pin center spacing values is not more than ±0.2mm.

8.1 QFN10_14x18

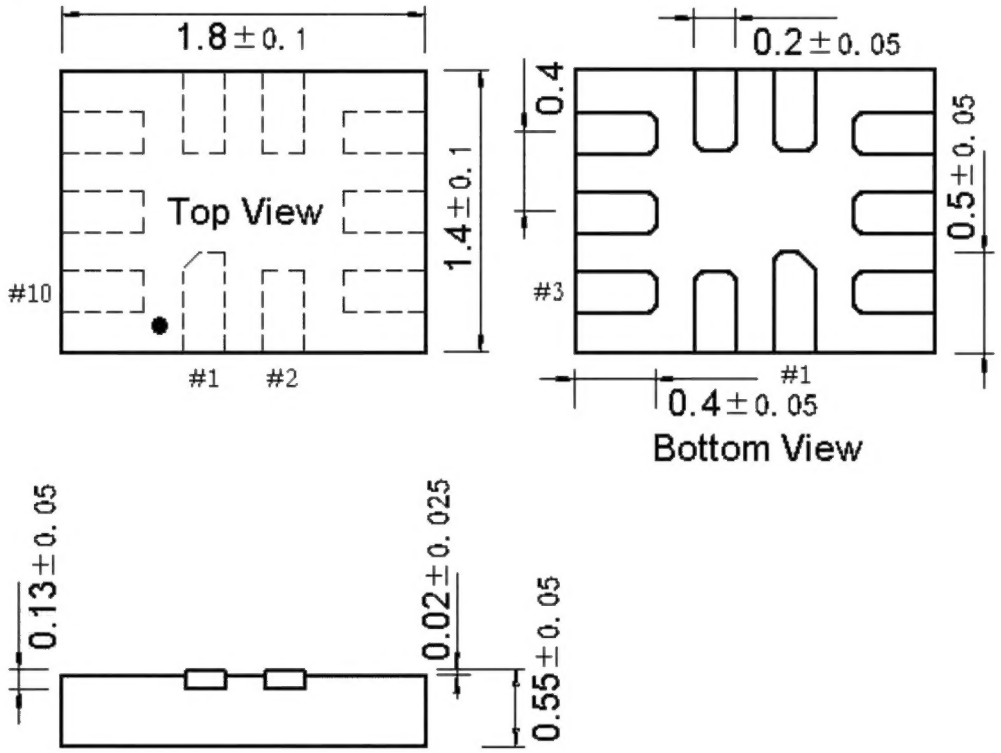

8.2 QFN10_15x2

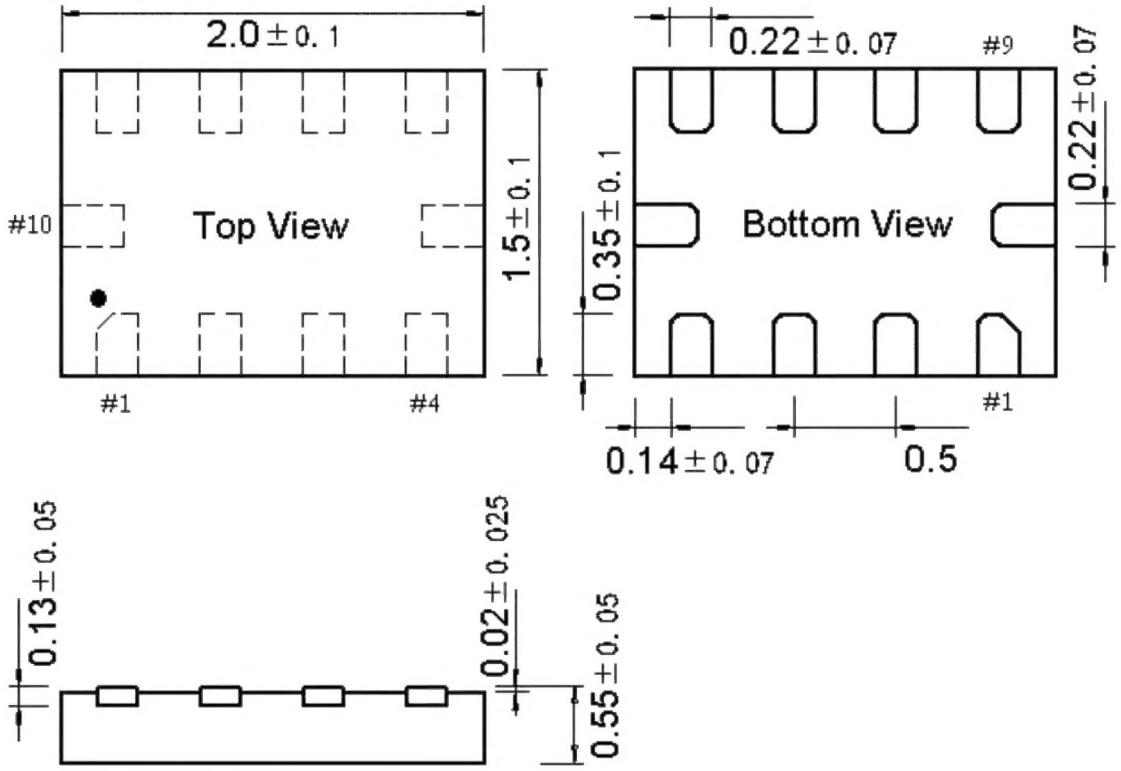
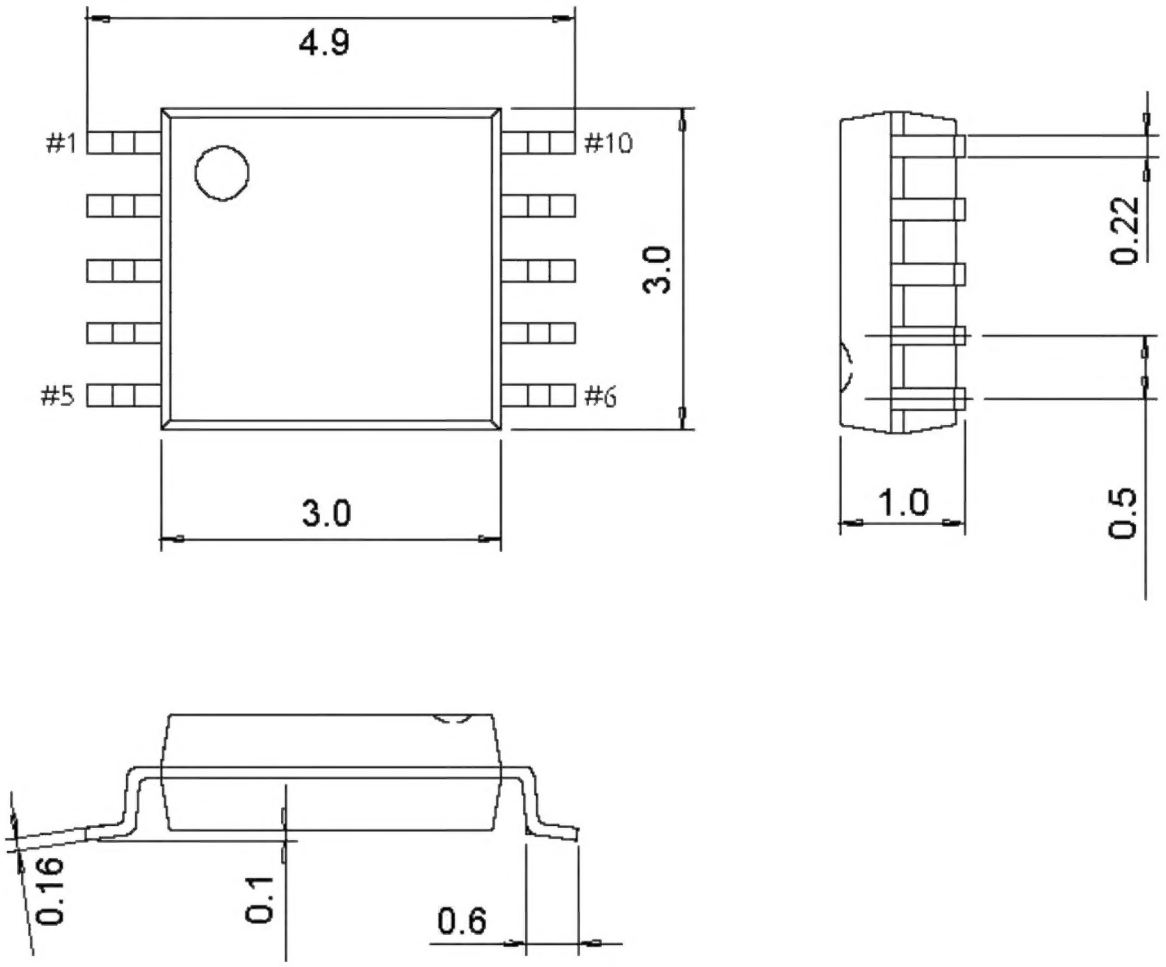
8.3 QFN10_15x2